CIRCUIT DIRECTORY			
NO.	DESCRIPTION	AMP	POLE
1-3	SERV. DISC.	100	2
2-4	LIGHTING	20	2
6	CONTROL	15	1
8	SIGNAL	50	1

MYERS POWER PRODUCTS, INC. 909-923-1800
2950 E. PHILADELPHIA ST. ONTARIO, CA. 91761-8545

MEUG16-M100-ADOT
120/240 VAC 1 PHASE 3 WIRE 100 AMPS MAXIMUM
SEE MAIN BREAKER HANDLE

INDUSTRIAL CONTROL-SUITABLE ONLY FOR USE AS SERVICE EQUIPMENT.

RAINPROOF TYPE 3R.

METER SOCKET 100 AMPS CONTINUOUS

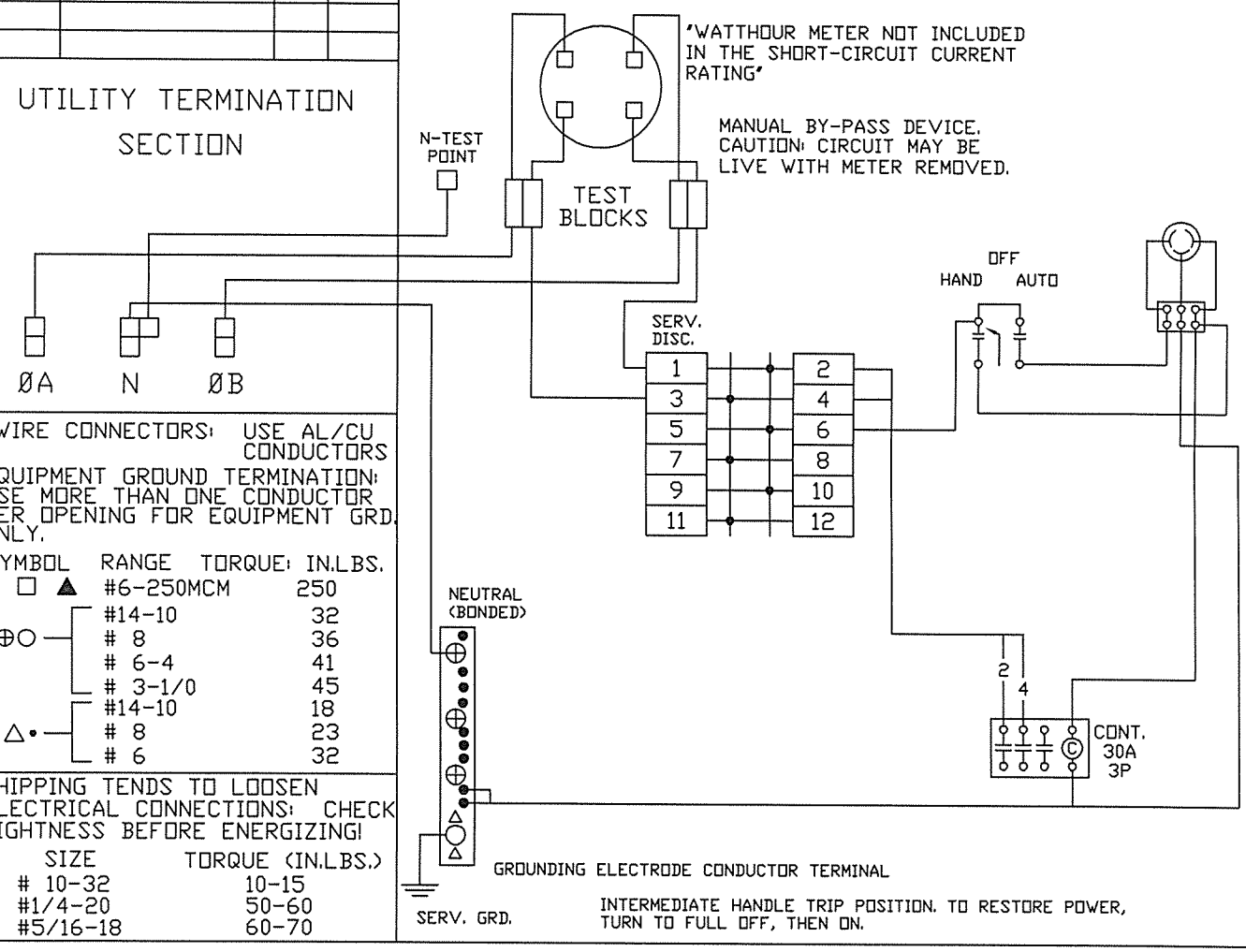

WIRE CONNECTORS: USE AL/CU CONDUCTORS

EQUIPMENT GROUND TERMINATION: USE MORE THAN ONE CONDUCTOR PER OPENING FOR EQUIPMENT GRD. ONLY.

SYMBOL	RANGE	TORQUE: IN.LBS.
☒ □ ▲	#6-250MCM	250
⊕○	#14-10	32
	# 8	36
	# 6-4	41
	# 3-1/0	45
△•	#14-10	18
	# 8	23
	# 6	32

SHIPPING TENDS TO LOOSEN ELECTRICAL CONNECTIONS: CHECK TIGHTNESS BEFORE ENERGIZING!

SIZE	TORQUE (IN.LBS.)
# 10-32	10-15
#1/4-20	50-60
#5/16-18	60-70

BONDED NEUTRAL, REMOVE BONDING MEANS FOR TEST PURPOSES ONLY

5005890-SP

CIRCUIT BREAKERS 100 AMPS OR LESS: CUTLER-HAMMER BR,BRH,GFCB,GFCBH,
SERVICE DISCONNECT: CUTLER-HAMMER TYPE BRH.

SHORT CIRCUIT RATING: RMS SYMMETRICAL AMPS 22,000 AT 120/240 VAC. THE SHORT CIRCUIT RATING IS LIMITED TO THE LOWEST INTERUPTING CAPACITY OF ANY DEVICE INSTALLED THERIN REPLACEMENT BREAKERS MUST BE SAME TYPE AND RATING. FIELD INSTALLED CONDUCTORS SHOULD BE SIZED BASED ON 60°C AMPACITY FOR LESS THAN 100 AMPS AND 75°C AMPACITY FOR 100 AMPS OR MORE BASED ON TABLE 310-16 OF NEC.